Technology Trends toward a System-in-a-Module in Power Electronics

by Fred C. Lee, Jacobus Daniel van Wyk, Dushan Boroyevich, Guo-Quan Lu, Zhenxian Liang, and Peter Barbosa

Abstract—*Currently, assemblies of power semiconductor switches and their associated drive circuitry are available in modules. MOSFETs and IGBTs are used as switches and these electric gated devices facilitate the incorporation of gate driving functions in the module. These modules are sometimes also provided with limited internal sensing and protection functions. From a few 100 watts downward, one finds silicon monolithic technology as the integration vehicle, while upward into the multi-kilowatt range, mixed mode module construction is used. This incorporates monolithic, hybrid, surface mount and wirebond technology. However, a close examination of the applications in motor drives and power supplies indicates that there has been no dramatic volume reduction of the subsystem. The power semiconductor modules have shrunk the power switching part of the converter, but the bulk of the subsystem volume still comprises the associated control, sensing, electromagnetic power passives (inductors, transformers, capacitors) and interconnect structures.*

The article addresses the improvement of power processing technology through advanced integration of power electronics. The goal of a subsystem in a module necessitates this advanced integration. The central philosophy of the technology development research in the National Science Foundation Engineering Research Center for Power Electronic Systems is to advance the state of the art by providing the concept of integrated power electronics modules (IPEMs). The technology underpinning such an IPEM approach is discussed. The fundamental functions in electronic power processing, the materials, processes and integration approaches and future concepts are explained.

Ample use is made of illustrations, photographs of integrated modules and subsystems to enhance the value of the article to the non-specialist.

1531-636X/12/$10.00©2002IEEE

Past, Present, and Future

The fundamental approach to electronic power processing has steadily moved toward "high-frequency synthesis", resulting in important improvements in converter performance, size, weight and cost. However, in some high frequency power processing technologies, fundamental limits are being reached that will not be overcome without a radical change in the design and implementation of power electronics systems. It is well recognized within the industrial sector that the performance of power electronics systems has been driven by improvements in semiconductor components over the last decades. Moving from bipolar to MOSFET technology [1, 2] has resulted in speed increases that, today, test the limits of packaging inductance and thermal handling. Thus, an order of magnitude increase in switching speed, which is possible with new device technologies, will require substantial reductions in structural capacitances and inductances associated with device and system-level packaging.

For a typical power electronics system, individual power devices are mounted on the heat sink, and the drivers, sensors, and protection circuits are implemented on a printed circuit board and mounted near the power devices. The manufacturing process for such equipment is labor and cost-intensive. However, some manufacturers have taken a more aggressive approach in recent years by developing a level of integration where power semiconductors in the die form are mounted on a common substrate with wire bonding. In principle, this is a form of discrete miniaturization where the same discrete dies are de-encapsulated and all components placed closer to each other. The number of interconnections and discrete functionality of all components remain as in a converter based on discrete construction. Although the wire bonding technology has seen many improvements in reliability, this approach still limits the possibilities for three-dimensional integration, as well as having electromagnetic layout constraints. The thermal management in this type of packaging is essentially limited to one-dimensional heat flow, while the requirements for heat extraction escalate, due to the close proximity of the components to each other. This is an indicator of another possible limit in this type of approach.

It is perceived, however, that power electronics modules constitute one of the driving forces towards modularization and integration of power electronics systems. Recent innovations in power modules have been mostly pushed by semiconductor development with the help of improved layout and packaging technologies. The development trends for power

The fundamental approach to electronic power processing has steadily moved toward "high-frequency synthesis", resulting in important improvements in converter performance, size, weight and cost. However, in some high frequency power processing technologies, fundamental limits are being reached that will not be overcome without a radical change in the design and implementation of power electronics systems.

Fred C. Lee, Jacobus Daniel van Wyk, Dushan Boroyevich, Guo-Quan Lu, Zhenxian Liang, and Peter Barbosa are with the Center for Power Electronics Systems, Virginia Polytechnic Institute and State University, Blacksburg, Virginia, 24061–0179. E-mail: daan@vt.edu

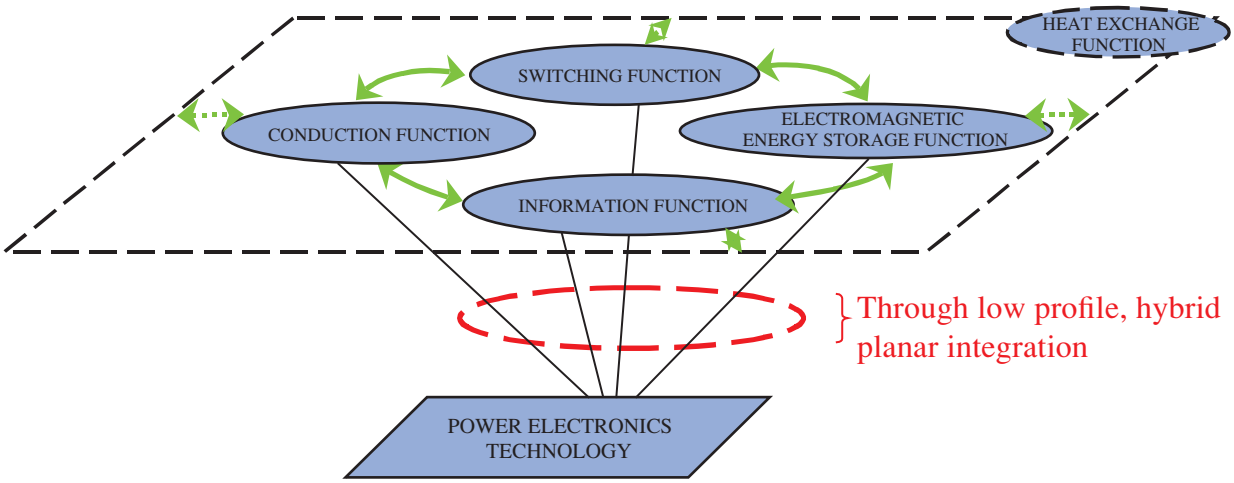

Figure 1. Fundamental functions in electronic power processing.

modules have been focused on increasing current and voltage levels, increasing operational temperature, enhancing reliability and functionality, as well as reducing size, weight and cost [3]. New ideas on power modules include the reduction of the number of interfaces to reduce the number of solder layers and the risk of solder imperfections and thermal fatigue. Another concept that has been around is the elimination of the base plate from the power module, first observed at low power and now migrating to higher power applications. In terms of reliability improvement, devices using low temperature joint (LTJ) technology do not change their thermal resistance after extensive power cycles (> 50000), as opposed to devices using low temperature conventional solder techniques that achieve the end of useful life after 30000 power cycles [3].

While semiconductor devices are still one of the dominant barriers for future power system development, devices do not currently pose the fundamental limitation to power conversion technology. It is rather packaging, control, thermal management, and system integration issues that are the dominant technology barriers currently limiting the rapid growth of power conversion applications [4]. To address some of these issues, this paper briefly discusses the technology advancements needed to improve the characteristics of power electronics systems, as well as the technologies being developed for integration of multi-kilowatt power electronic equipment. Among these technologies being developed are the planar metalization device interconnect, that allows three-dimensional integration of power devices, and the integration of power passives to increase the power density, as these dominate the physical size of the system. The technologies being developed will ultimately span a wide range of applications from distributed power systems to motor drives. This paper also discusses results obtained from the various technologies being developed within the research scope of the Center for Power Electronics Systems (CPES), whose mission is to promote an integrated approach to power electronics systems in the form of highly Integrated Power Electronics Modules (IPEMs).

A Motivation for Low Profile, High Density Integration

The advantages of incorporating high-density multi-functionality into

Fred C. Lee

Jacobus Daniel van Wyk

Dushan Boroyevich

Guo-Quan Lu

Zhenxian Liang

Peter Barbosa

solids through planar integration technology have been well illustrated by the advances of microelectronics in the past [5]. While it can be maintained that electronic energy processing is different from information processing, many parallels can be pointed out.

- Both technologies have electromagnetics as a fundamental limit.
- Both technologies are eventually thermo-mechanically limited (i.e. in terms of interface reliability and loss density).
- Both technologies are materials limited.
- New applications for both are driven by a relentless downward cost spiral.

Integration in microelectronics has developed using a single semiconductor material—silicon. Such exclusive use of silicon has not yet been successful for power electronics integration. The most important reason for this is the inadequate electromagnetic characteristics of silicon, thus necessitating a hybrid integration technology for power electronics [6, 7]. Figure 1 defines the fundamental functions found in any electronic power processor. The switching function is used to control the flow of electromagnetic energy through the processor, the conduction function is used to guide the flow appropriately, while the electromagnetic energy storage function is used to provide energy continuity at the input and output of the processor. The information function relates the spatial and temporal action of the first three functions, and the heat exchange function maintains the thermal integrity of the system. A careful consideration of these fundamental functions to be performed in power processing indicates that only the switching function and the information function can be successfully accomplished in known semiconductors such as silicon, due to the required electromagnetic characteristics.

A real paradigm shift in integration technology for power electronics can therefore evolve from the development of a technology that uses appropriate planar electromagnetic materials in conjunction with metalization for all interconnects, planar layers for dielectrics and magnetics and their interconnects, and stacking of these planar layers in a quasi-3D fashion for high density—such is not easily achievable with the widely used wire bonding—leading to actual low profile integrated power processing blocks having quasi-planar form factors as modules for power electronic system synthesis [8]. This low profile construction will have the power processing conform to the form factor of the applications it drives (flat screens, flat lamps, flat laptops, linear propulsion systems, and so forth), and at the same time will increase the surface-to-volume ratio very favorably for the thermal management.

Furthermore, the present manufacturing processes of the different types of discrete components and their packaging as used in power electronics are incompatible with each other. Ex-

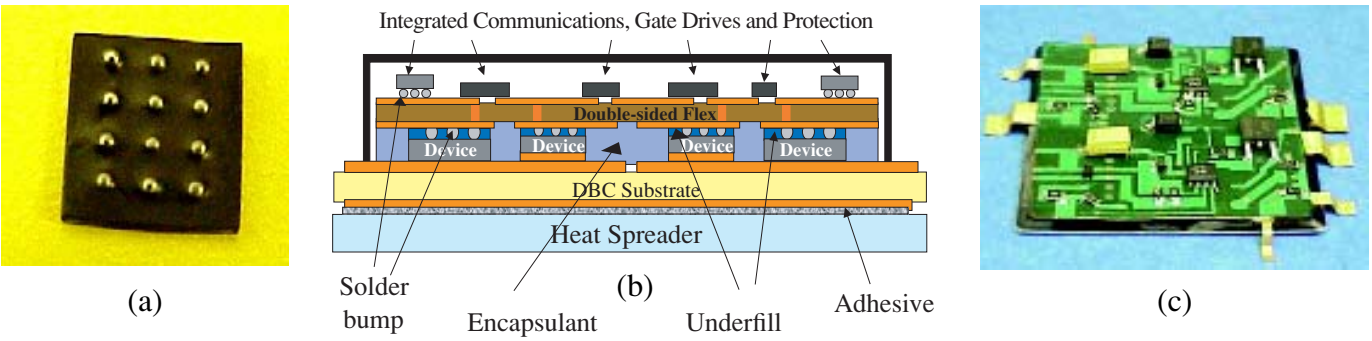

Figure 2. (a) D2BGA IGBT chip-scale package, (b) schematic of FCOF power switching stage module structure, and (c) FCOF power switching module prototype.

amples of these technologies are the power semiconductor processing, coil and transformer winding, capacitor winding and other capacitor manufacturing methods, resistance manufacturing technologies, and so forth.

Compatible processes that can be incorporated into one integrated production line are needed. As the nature of the integrated module will be hybrid, however, it has to be assumed that there will be a materials based manufacturing process (for producing power semiconductor dies, magnetic sheets, dielectric sheets, substrate sheets, for example) preceding the planar metalization, the large area electrical and thermal contacting, the integrated planar power passive formation and the layer stacking and packaging operations [9]. We have developed our technologies with this approach in mind. To achieve this we have placed a limitation on the nature of the process we use. Only the following processes are implemented in the technologies discussed further on, since they are all compatible with integrated manufacturing:

- Planar metalization technology by sputtering and electroplating;
- Reflow soldering for high quality large area electrical-thermal interconnects;
- Low temperature sintering for high quality large area electrical-thermal interconnects;
- Photolithography and wet chemistry for pattern definition and etching;
- Plasma cleaning as intermediate process steps for interface improvement;
- Laser machining and trimming as mechanical formation steps;
- Encapsulation technology for electrical, mechanical and thermal integrity.

The use of selections of these process steps will be found in each of the technologies described below.

High Density Low Profile Power Processing Structures

As first examples of achieving high-density power processing structures with potential for incorporation into 3-D integration in quasi-planar modules, the following approaches were developed. These approaches use some or all of the above steps to produce integrated active power switching modules and integrated electromagnetic power passive modules for building integrated power electronic converters for currents up to 50A and voltages up to 800V.

Flip-Chip-on-Flex Power Switching Stage Modules

Flip-chip-on-flex (FCOF) power switching stage modules consist of discrete power chip packages with some of the gate driver components. These chip packages are named Die-Dimen-

sional Ball Grid Arrays (D2BGAs) that comprise a power chip, inner solder bumps, high-lead solder balls, and molding resin [10]. Figure 2(a) shows a D2BGA package.

The cross section of the package structure is illustrated in Fig. 2(b). The chip-scale packaged devices are flip-soldered to a patterned flexible substrate. An organic underfill material is introduced into the gap between the packages and substrate to enhance mechanical adhesion and reliability by distributing stresses caused by the mismatched coefficients of thermal expansion between the chip and substrate. To complete the electrical circuitry and achieve good thermal performance, the backsides of the power chips are soldered on to a patterned direct bond copper (DBC) substrate. Finally, the power stage is encapsulated. The photo in Fig. 2(c) shows a prototype of the packaged FCOF switching power stage module.

Dimple Array Interconnect Power Switching Stage Modules

Aiming at enhancing thermal fatigue reliability of solder bumping interconnects in power packaging applications, we have developed the Dimple Array Interconnect (DAI) technique [11]. DAI packaging involves the use of copper flex/sheet with arrays of preformed dimples, which serve as both electrical interconnections and heat removal paths. As shown in Fig. 3(a), the key feature of DAI is its dimpled metal interconnects, which are convex valleys on metal sheet protruding from one side, that enable easy forming of solder joints with underlying devices. The resultant smooth fillets in solder bumps could significantly reduce thermally induced stresses and strains.

An integrated DAI power switching stage module is schematically shown in Fig. 3(b). The DAI module is realized by solder-attaching DAI power devices, such as diodes and IGBTs, onto DBC substrate, followed by underfilling and encapsulation. Because only one type of solder is needed to form the dimple solder joint, there are more options to select a solder of different melting temperatures for the surface mount (SMT) gate driver and control components. The prototype DAI power switching stage module is shown in Fig. 3(c).

Description of Embedded Power Technology

Embedded power technology [12] has been developed for integrated packaging of integrated power electronics modules (active IPEMs) which are usually comprised of power switches and associated electronics

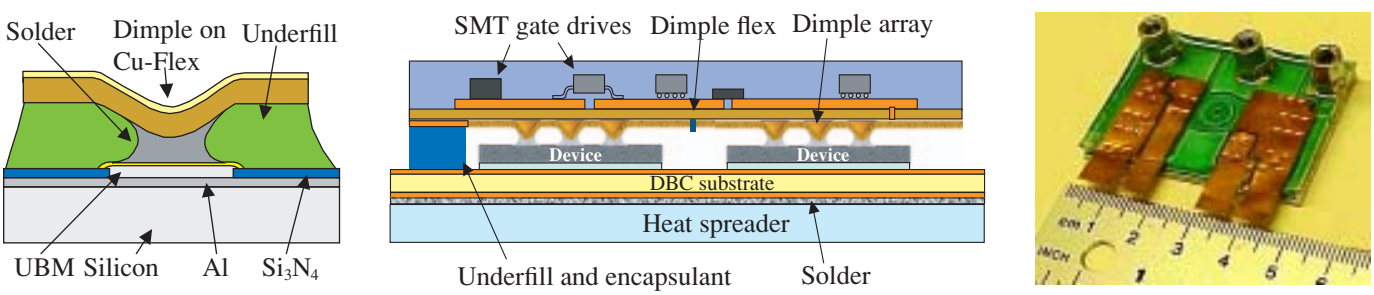

(a) (b) (c)

Figure 3. (a) Schematic of Dimple Array Interconnect, (b) integrated DAI power switching stage module, and (c) prototype Dimple Array Interconnect power switching stage module.

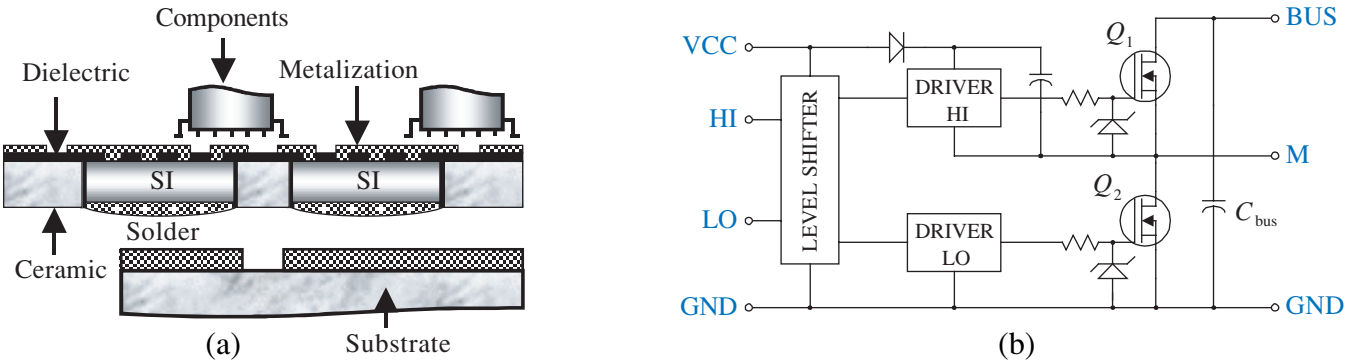

Figure 4. (a) Schematic integration structure of embedded power module and (b) circuit diagram.

circuitry. Figure 4(a) shows the conceptual structure of the embedded power packaged module. Essentially, this technology differs from the previously described ones in its integrated processing approach, and therefore is one step advanced from FCOF and DAI that more resemble the discrete construction philosophy. It consists of three levels, i.e.: electronic components, a multiple embedded power chip stage, and a base substrate (from top to bottom). These three parts are soldered together to build a final module. The electronics circuitry (components in the figure) includes a gate driver and control and protection components. The base substrate provides electrical interconnection and cooling of power chips. The core element in this structure is the embedded power stage that comprises the ceramic frame, power chips (silicon in the figure), isolation dielectrics and metalized circuit. Inside the power stage, multiple bare power semiconductor dies, featuring vertical semiconductor structures with topside and backside electrode pads, are directly buried in a ceramic frame. Table I summarizes the fabrication steps of an embedded power module. They are the ceramic cutting, device mounting, dielectric printing and metalization. One of the features of this technology is its mask-based processing. The metalized base substrate is patterned using photolithography, the dielectric polymer is applied with a screen-printing method, and the chip-carrier ceramic frame is fabricated by computer controlled laser machining.

This technology has been chosen to be demonstrated with an active IPEM for a 1kW DC/DC converter, as will be discussed subsequently.

Table I. Processing steps for embedded power stage.

Step Description	Description
1. Ceramic frame	Openings in flat Al_2O_3 or AlN plate by laser cutting
2. Die mount	Dispense dielectric
3. Dielectric pattern	Void-free precision dielectric pattern, good adhesion and CTE match by screen-printing or/and photolithography
4. Metalization	Adhesion, barrier, low stress, low resistance by sputtering of Ti/Cr-Cu thin film. Thicker (>5mil), low stress, low resistance, solderable, precision pattern by electroplating of Cu+ electroless plating of Ni, etching

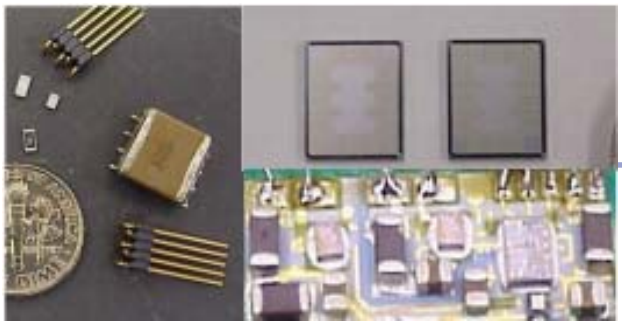

(c)

Figure 4c. Components for embedded power packaged active IPEM.

Figure 4(b) shows the topology diagram based on the totem-pole structure with high- and low-side drivers and control. The half-bridge consists of two MOSFET devices and gate drivers using three ICs. Photos of the power semiconductor dies and the fabricated hybrid gate-drive circuitry are shown in Fig. 4(c).

Figure 5 depicts the assembly processes following the embedded power stage and the final packaged module. Figures 5(a) and (b) present the top and bottom views of the embedded power stage. Figure 5(c) shows components mounted on the topside of the metalized pattern. An Al_2O_3 DBC substrate with 10mil-thick Cu on both sides of a 25 mil-thick ceramic was used as the base substrate, which was pattern-etched on one side (Fig. 5(d)), while the other side is attached directly to the heat spreader. Figure 5(e) shows the power stage solder-mounted to the substrate. Finally, after the gate driver had been mounted and connected to the power stage, the entire module was encapsulated with protruding input/

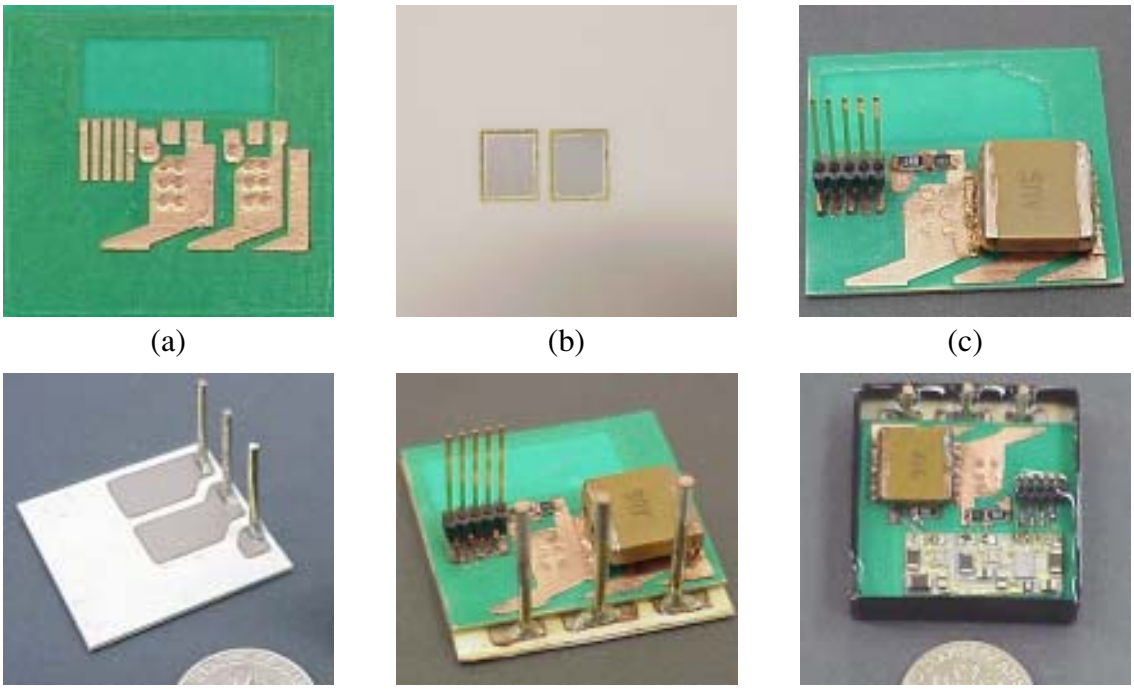

(a) (b) (c)

(d) (e) (f)

Figure 5. Assembly process of embedded power module: (a) top view of embedded power stage, (b) back view of embedded power stage, (c) components attachment on top, (d) patterned DBC for base substrate, (e) soldered on substrate, and (f) final encapsulated module.

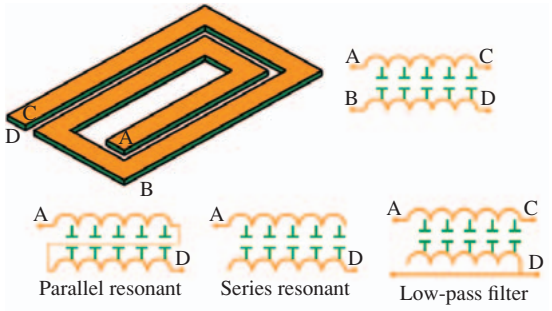

(a)

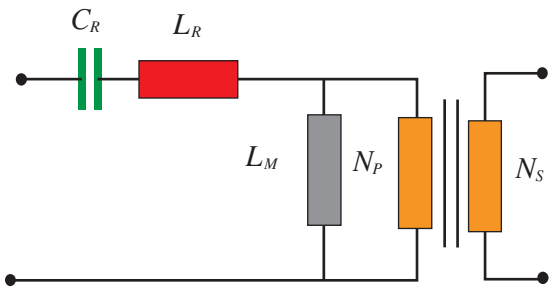

(b)

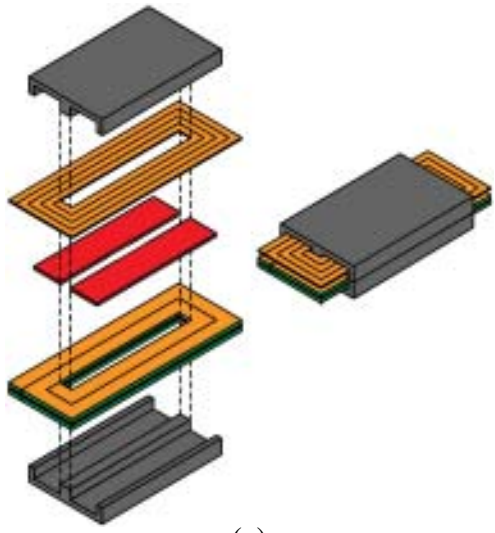

(c)

Figure 6. (a) Spiral integrated LC structure with distributed capacitance and possible external connection configurations, (b) simplified equivalent circuit, and (c) exploded view.

output pins (Fig. 5(f)). The completed module measures 30x27x10mm.

Spiral Integrated Power Passive Modules

In order to integrate the electromagnetic power passive components used in power electronic converters into modules, additional technology had to be innovated. This integration technology for power passives can best be described by first considering a simple bifilar spiral winding as shown in Fig. 6(a). This structure consists of two windings (A-C and B-D), separated by a dielectric material. This resultant structure has distributed inductance and capacitance and is best described as an electromagnetically integrated LC-resonant structure for which equivalent circuit characteristics depend on the external connections (Fig. 6(a)). Even more complex integrated structures can be realized by adding more winding layers. This has been demonstrated with an integrated resonant transformer structure (L-L-C-T) as shown in Figs. 6(b) and (c) [13]. Design of these structures requires deliberate increase and modification of naturally existing structural impedances to realize a particular equivalent circuit function—for example the increase of the intra-winding capacitance to form the LC resonant structure. The classical term "parasitics" therefore no longer applies and all the higher-order impedances are rather referred to as structural impedances. The spiral integrated power passive structure has been developed over a number of years with advances in electromagnetic modeling, design and loss determination [14]. Loss modeling now includes core losses, dielectric losses, skin and proximity effects, and conduction losses for non-sinusoi-

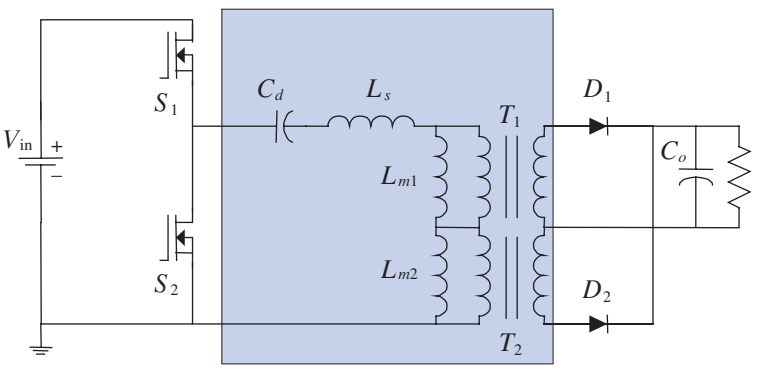

Figure 7a. Schematic of non-resonant AHBC converter.

dal voltages and currents. The improved models have led to integrated structures with power densities in excess of 29W/cm^3 (480W/in^3) operated at frequencies of up to 1MHz [15].

This developed technology for integrated passive components has mostly been implemented in resonant converter applications. However, its application in a non-resonant PWM converter has also been demonstrated [16–18], as will be outlined in the subsequent systems discussion. In this application, the planar passive integration technology, together with the planar integrated magnetics technology, were combined to integrate all of the high frequency passive components in a 1 kW Asymmetrical Half-Bridge DC/DC Converter (AHBC) for a Distributed Power System (DPS) application. The circuit diagram of the AHBC is shown in Fig. 7(a), using a symmetry split as in Fig. 7(b) to enhance integration possibilities. The current-doubler inductors and the isolation transformer are not magnetically coupled, but can be integrated into two separate structures by splitting the isolation transformer and utilizing the equivalent magnetizing inductances to realize the current doubler inductors (reflected to the secondary) as shown in Fig. 7. These two magnetic structures can in turn be integrated into one physical structure through integrated magnetics technology [13]. A cross-section, reluctance diagram and exploded view of this resultant first generation spiral integrated passive module are shown in Fig. 8. The I-core shares the flux for both of the integrated modules LLCT$_1$ and LLCT$_2$ and the AC flux is partially cancelled in the shared I-core as shown in Fig. 8(b). The relatively large dc decoupling capacitor, C_d (see Fig. 7) is integrated into both the primary windings of the

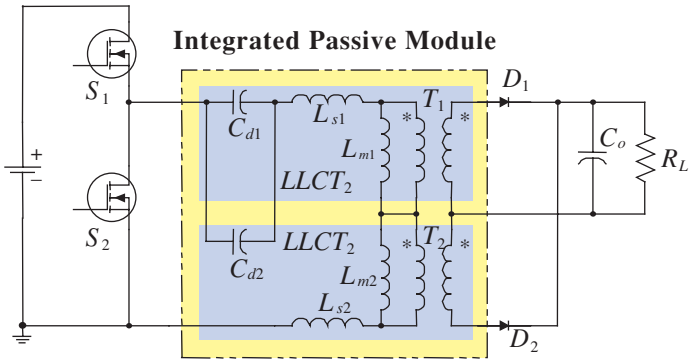

Figure 7b. Schematic of modified equivalent circuit for implementation of electromagnetic integration.

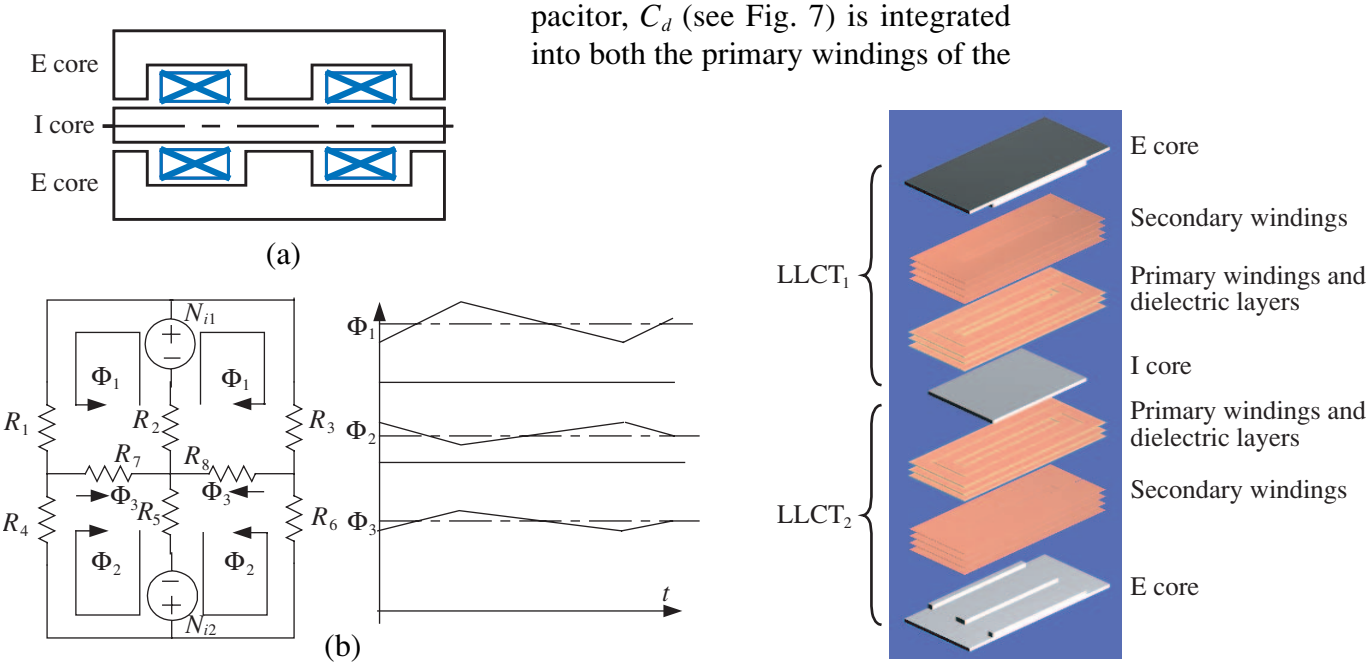

Figure 8. (a) Cross section, (b) reluctance diagram, and (c) exploded view of non-resonant spiral integrated passive structure with integrated magnetics.

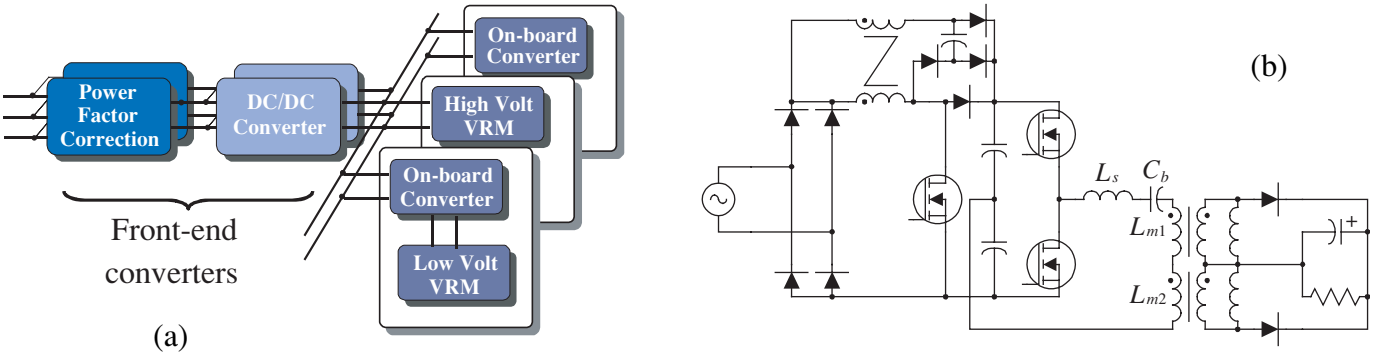

Figure 9. (a) Distributed power system and (b) front-end PFC and DC/DC converters.

structure, using very high permittivity (Er > 12000) ceramics.

Packaging of Power Electronics Systems—the DPS Example

The use of distributed power systems (DPS) for computer and telecommunication applications has opened up the opportunity to develop a standardized modular approach to power processing, which will improve the design and manufacturing processes significantly, as well as enhance the electrical system performance. For this reason, a DPS has been chosen to demonstrate the advantages of integrating power electronics systems, using a selection of the technologies described previously.

The structure of a typical DPS is shown in Fig. 9(a), while a building block of a front-end converter is illustrated in detail in Fig. 9(b). A typical three-dimensional solid-body model representation for this type of system is shown in Fig. 10(a). As observed, the existing approach requires discrete components, which makes it difficult to optimize space usage and to increase the system power density. The solid-body model shows that the components of the front-end converter are distributed on the printed circuit board, while Cu traces are routed to distribute power and control signals to all devices. This layout approach presents severe limitations from the electrical and thermal viewpoints. Figure 10(b) shows the top view of the 3-D solid-body model. The major components are identified in the same figure, as well as the critical paths defining which components must be placed next to each other in order to reduce structural in-

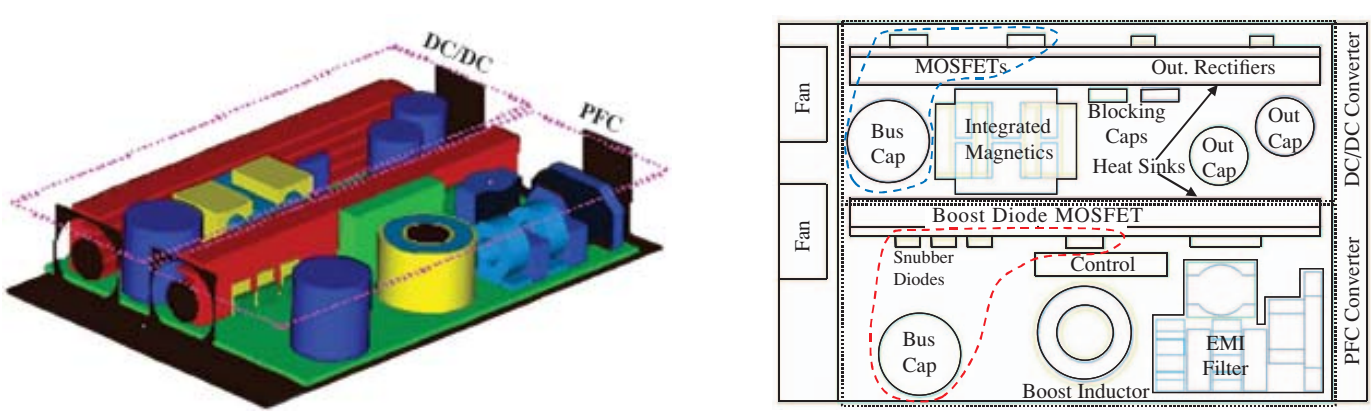

Figure 10. Typical component layout for discrete DPS applications: (a) 3-D solid-body model and (b) top view and critical paths of a typical discrete DPS front-end converter.

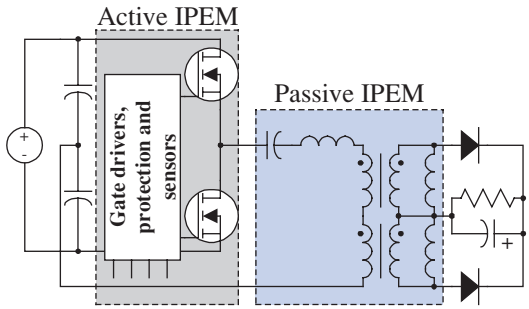

Figure 11. Asymmetrical half-bridge DC/DC converter (AHBC) with active IPEM as in Fig. 12.

ductances. The inductance formed by any of the critical loops will generate voltage overshoot across the PFC and DC/DC switches during turn-off.

Although bringing devices together helps reduce the parasitic inductances, there is a clear limitation to this packaging approach because the space optimization is limited by the form factor of the various components. Therefore, the parasitic inductance of the packaging approach shown in Fig. 10(a) becomes a limiting factor to increasing the power level, switching frequency and consequently power density. The only way to overcome this problem is to minimize the inductance of the critical paths by seeking integrated approaches for power devices and components. The realization of an integrated power electronics system requires advances in technologies, which depend upon finding solutions to deal with the multi-disciplinary issues in materials, electromagnetic compatibility and thermal management.

Even though the end objective is to integrate the functions and components for both the PFC and DC/DC converters shown in Fig. 9(b), the results reported hereafter are related solely to the integration of the front-end DC/DC AHBC, which is illustrated in Fig. 11, by utilizing some of the previously described technologies. In the same figure, two blocks are highlighted as an active integrated power electronics module (active IPEM) and as a passive integrated power electronics module (passive IPEM). The active IPEM represents the integration of power MOSFETs and gate drivers, while the passive IPEM has been discussed (see Figs. 7 and 8). The main goals of integration are to reduce parts count, increase power density, develop a modular approach, improve thermal management, and reduce the overall number of interconnections at the system level.

DPS-IPEM Design and Implementation Using Integration Technology

The starting point in designing an integrated system is to define specifications at the system and module levels. For this reason, Table II shows the specifications for the DC/DC converter (system level) operated at 200kHz,

Table II. DC/DC converter specifications.

Parameter	Specification
Input voltage	300 V – 415 V
Output voltage	48 V ± 10%
Output voltage ripple (pk-pk)	480 mV
Isolation (output to ground)	> 10 kΩ
Output power	1 kW
Ambient temperature	50° C
Air flow at 5000 ft	20 CFM at 50° C amb 15 CFM at 35° C amb
Safety	UL 60950
EMI system-level	EN55022 Class B

Table III. Active IPEM requirements.

Parameter	Specification
DC bus voltage (500 device)	400V
Surge of DC bus voltage	415V
Power terminal current	25A
Junction temperature (max.)	150° C
Maximum operating junction temperature	125 ° C
Operating case temperature	–20 ° C –100 ° C
Isolation voltage (case-to-terminal at 60Hz)	> 2500 V
Power terminal leakage current	< 500 μA
Maximum switching frequency	500 kHz

Table IV. Passive IPEM requirements.

Parameter	Specification
DC blocking capacitance	> 2 μF
Leakage inductance (ZVS range 50%–100%)	2 μH
Magnetizing inductance	45 μH
Safety	UL 60950

while Table III and Table IV describe the requirements for the active and passive IPEMs (module level).

In the past, several approaches had already been developed by others for integrated packaging of power modules. Previous work reported a MCM-D package for power applications [19], where a silicon chip with one power transistor was used as a MCM-D substrate onto which the gate driver was mounted using flip-chip technology. A high level of integration was accomplished, but the power bus was still interconnected to the base substrate using bond wires. This also occurred in the IPM packaging technology, where power chips were mounted and interconnected with bond wires onto a high-density substrate [20]. The concepts of embedded chips and bumpless bonding were also previously investigated for microelectronics packaging applications [21]. The planar device metalization technology that was developed in CPES and described previously, namely Embedded Power [12], is a 3-D multi-layer integrated packaging technology that sandwiches power bus structure and integrated circuitry. The principle of this technology is shown in detail in Fig. 12(a), while the metalization view of a power module is shown in Fig. 12(b). Note that since one of the main structural ele-

Table V. Design summary for DPS IPEM.

Property	Gen I	Gen II – Preliminary design	Gen II – Proposed design
Substrate area (mm^2)	40 x 30	27 x 30	28.5 x 27.3
Inductance (nH)	10	3	3
Common-mode (CM) capacitance (pF)	4	60	20
Cm current at 200kHz (A)	0.1	1.9	0.6
Temperature rise (°C)	38	39	39

ments of this planar technology is a ceramic chip carrier, the structure is suitable to mounting passive devices and advanced control functions in 3-D fashion directly on the carrier, as pointed out previously.

The design of the active DPS-IPEM was developed further to reduce the geometric footprint, while maintaining electrical and thermal performance [22]. A set of active DPS-IPEM models based on three-dimensional geometry was developed, including both electrical and thermal models. The electrical models were implemented in Ansoft Maxwell for electric parameter extraction, while the thermal models were implemented in I-DEAS Thermal.

Figure 13 and Table V summarize the results obtained from the design optimization of the active DPS-IPEM. The benchmark design was based on the wire bonding approach, while the other two designs, namely preliminary and proposed, were implemented with the embedded power technology. The proposed design achieved 35% reduction of footprint area as compared to the wire bonding version, and approximately 9% reduction in comparison to our preliminary design shown in Fig. 13(b). The most significant result was that the planar interconnects reduced the structural inductance by a factor of three when compared to the wire bonding technology (Table V shows only the largest structural packaging inductance of the power module;

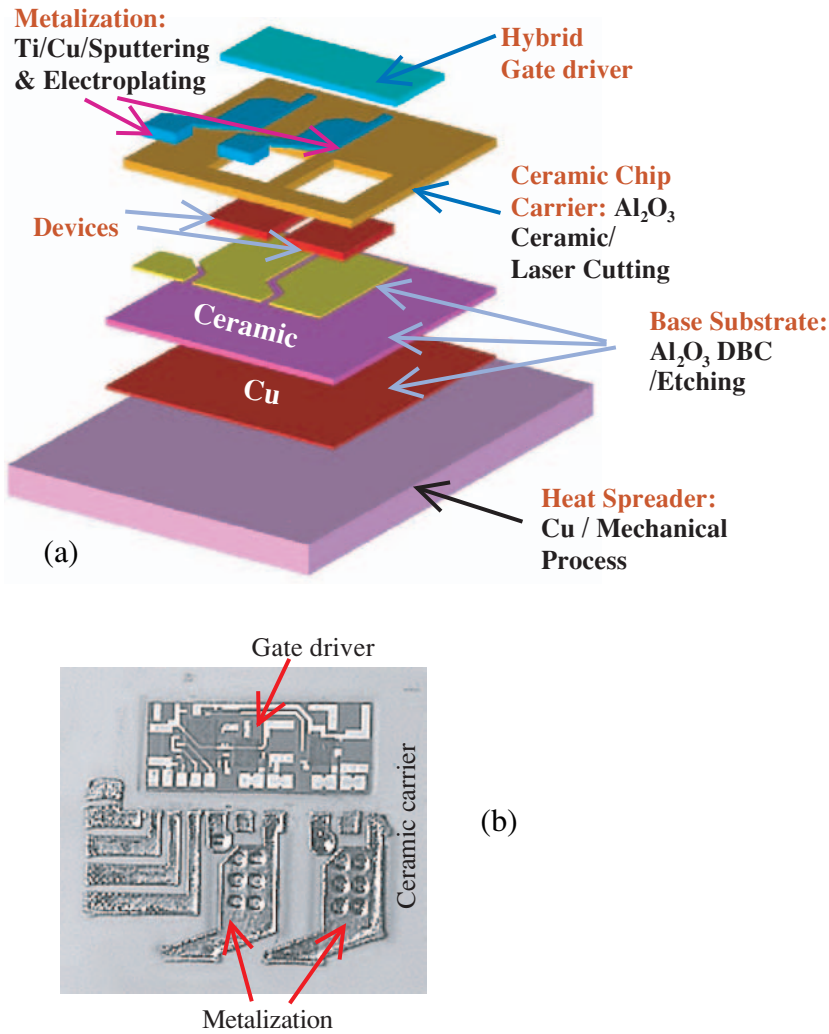

Figure 12. (a) Three-dimensional view of the active module using embedded power technology and (b) top view after metalization and assembly of gate driver.

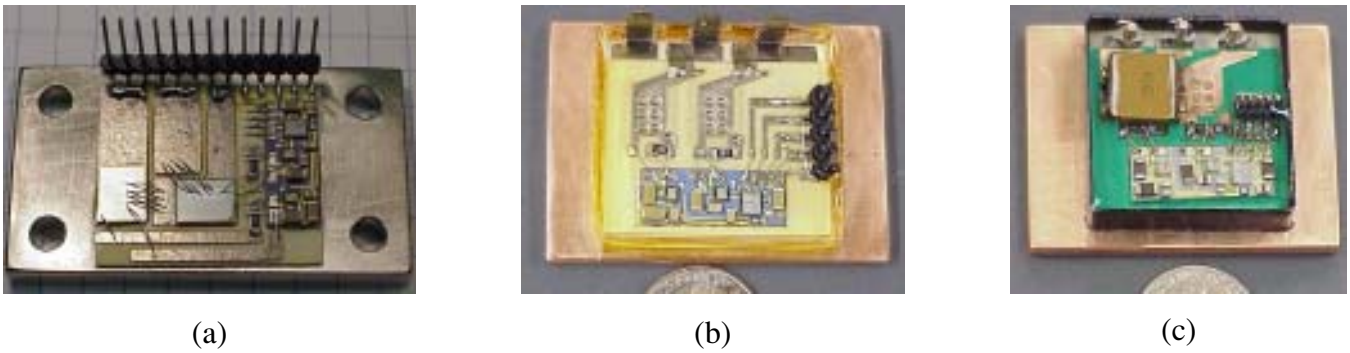

Figure 13. (a) Generation I IPEM using wire bonding, (b) generation II IPEM preliminary design using embedded power, and (c) generation II IPEM proposed design using embedded power.

other paths also showed a similar reduction ratio). Because of the planar metalization, the common-mode (CM) capacitance is increased by a factor of five, as compared to the wire-bonding module. A parametric thermal study performed on the embedded power modules revealed to what extent footprint reduction increases the temperature rise, that ceramic thickness does not greatly affect the module thermal performance, and quantified how the heat spreader thickness improves thermal management [22]. AlN substrate presented a slightly better thermal performance than Al_2O_3. Since ceramic thickness does not largely affect temperature rise, it should be chosen to minimize cost impacts while maintaining reasonable levels of common-mode capacitances. Although the heat spreader improves thermal management, it presents a detrimental effect if the thickness increases beyond the optimal recommendation. The proposed design recommendations for the active IPEM based on cost and performance tradeoffs were 0.6mm-thick (25 mil) Al_2O_3 ceramic substrate and 3mm-thick heat spreader to improve thermal management and provide suitable mechanical stability. The next generation of the active DPS-IPEM will aim at eliminating the heat spreader, while still maintaining electrical-thermo-mechanical performances similar to the proposed design shown in Fig. 13(c).

Design and Implementation of Passive IPEMs Using Hybrid Winding Technology

For the design of the second generation passive IPEM, constraints and parameters for all components were obtained from the system requirements and circuit analyses, as illustrated in Table IV. Because of the current doubler configuration, the structure of the passive IPEM was now realized by stacking two transformers and using only one DC blocking capacitor, as illustrated in Fig. 14(a). The transformers are built with two planar E-cores that share a common I-core, as detailed in Fig. 14(b). The DC blocking capacitor of the AHBC is now implemented in only transformer T_1 using the hybrid

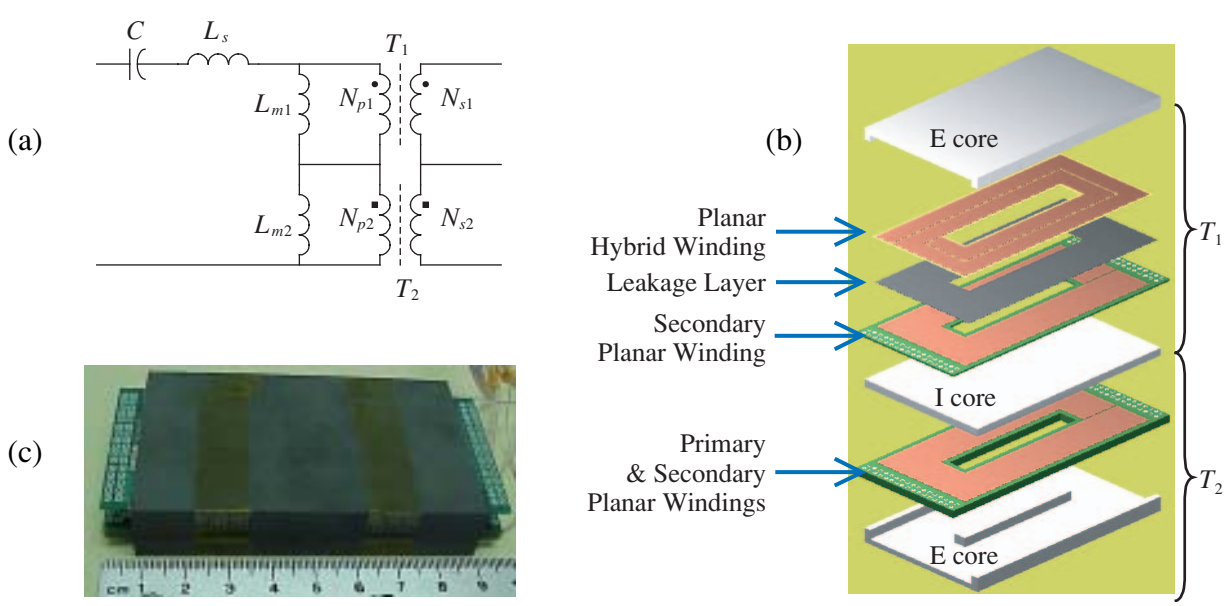

Figure 14. Components of the passive IPEM: (a) equivalent circuit, (b) exploded view of the passive IPEM, and (c) 1 kW prototype.

winding technology [16, 23]. This technology is implemented using Cu traces on both sides of the winding and a dielectric layer placed in the middle to enhance the capacitive component of that winding. The transformer T_2 is a conventional planar low-profile transformer. As already mentioned, the inductances of the current doubler output filter are realized by the magnetizing inductances of both transformers. Figure 14(c) shows a picture of the final generation 2 passive IPEM implemented for the AHBC.

Experimental Results Using Active and Passive IPEMs

The AHBC configuration using the combined active and passive IPEMs is shown in Fig. 15(a). The modular approach to system integration can be clearly seen from this figure, where sub-assemblies are arranged and externally connected via a PCB placed on top. Figure 15(b) shows the waveforms measured at full load, in which V_{ds1} and V_{g1} are the waveforms related to the upper switch of the AHBC, while an efficiency comparison between the IPEM-based and the discrete approaches is shown in Fig. 15(c).

There are several advantages for integrating power electronics systems using the IPEM concept. First, the modular approach can reduce the design and implementation time cycles, as well as simplify the assembly process. Second, the integration of functions in the form of IPEMs leads to improved usage of space, which increases power density and reduces profile of power electronics systems. As an example, the power density of the IPEM-based system presented in Fig. 15(a) is increased by 2.8 times with respect to its discrete counterpart previously presented [24]. Third, the reduction of interconnects at the system level due to integration certainly improves the system reliability, but this improvement has yet to be quantified. Fourth, the reduction of structural packaging inductances leads to improved electrical performance, which in turn leads to reduced voltage ringing across the power switches, allowing increasing the switching frequency to further improve power density, as long as thermal de-rating is not implied.

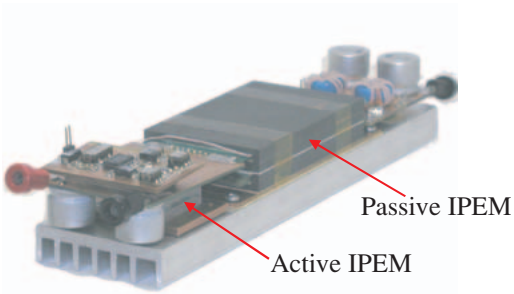

(a)

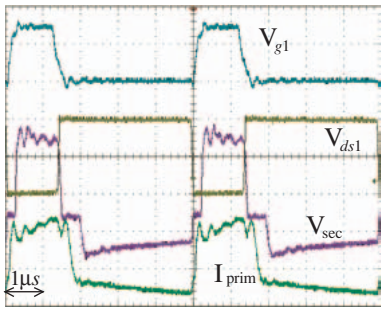

(b)

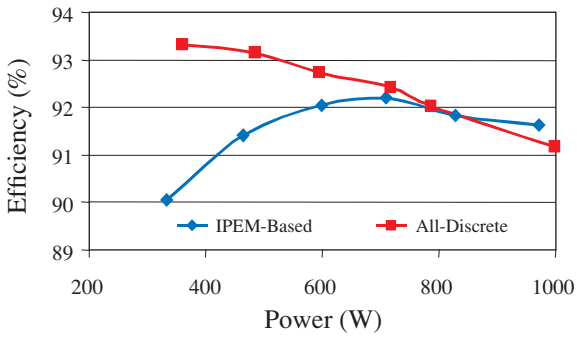

(c)

Figure 15. (a) View of the IPEM-based prototype, (b) waveforms under test at 1kW (V_{g1}:10V/div; V_{ds1}:200V/div; V_{sec}: 100V/div; I_{prim}:10A/div; time scale: 1ms/div), and (c) efficiency comparison.

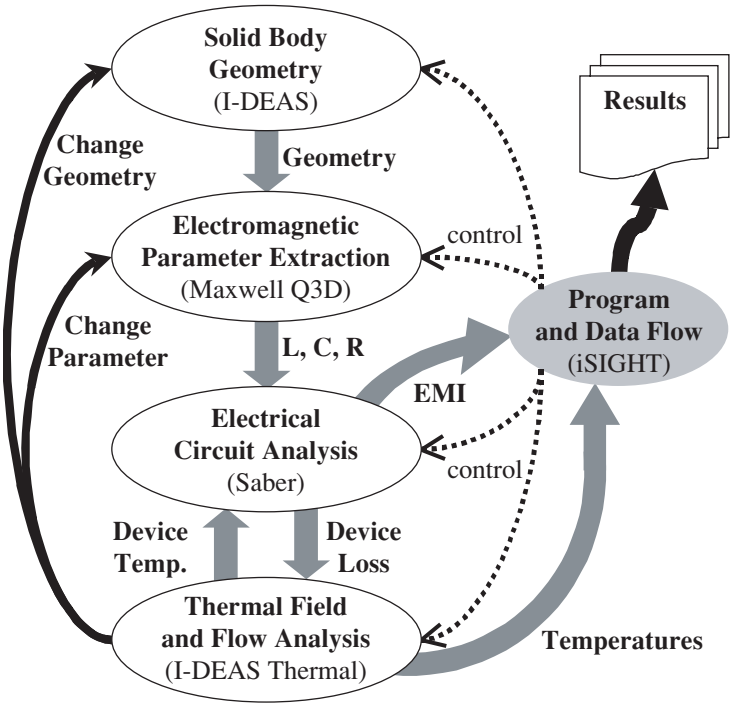

Figure 16. Integrated thermal and electrical analyses.

Integrated Design Methodology

A multidisciplinary approach to optimizing materials utilization, packaging and thermal management is necessary to realize an integrated system. The entire procedure for designing an IPEM, including layout, fabrication and systems applications necessitates integration of CAD tools [25]. This development is as essential as achieving a paradigm shift in the actual integration technologies. An example of integrated analysis used to optimize the design of the active IPEM can be seen in the flowchart shown in Fig. 16. In this example, a software tool called iSIGHT is used to integrate and manage the data exchange between all other software tools. As can be seen, the user inputs the solid-body geometry and material data describing the IPEM layout into the mechanical CAD software, such as I-DEAS, which has the capability of exporting the geometry in a number of format files and an optional open architectural library that facilitates software integration. The same geometry and material data are shared by both the electromagnetic field and thermal analysis software packages. The structural parameters are extracted by Ansoft Maxwell and transferred as an equivalent circuit netlist, as shown in Fig. 17(a), to a circuit simulation software such as Saber that will then perform transient, EMI and loss analyses. I-DEAS carries out the thermal analysis to produce the temperature map within the IPEM, as shown in Fig. 17(b). An interaction between Saber and I-DEAS is managed by iSIGHT until the temperature and device losses achieve convergence. This kind of analysis enables the designer to evaluate the tradeoffs between the electrical and thermal performance at the component, sub-system and system levels. The user can change the relative layout, size, and material of the structural parts, or even select different heat sink sizes or fluid flows, to achieve satisfactory results [26].

Conclusion

Advances in semiconductor technologies have been the major driving force for reducing power electronic converter size, weight, and cost—mostly due to an increase in switching frequency. However, for some high frequency applications, fundamental limits in packaging are being reached. An order of magnitude increase in switching frequency will require substantial reduction in structural inductances associated with device and system-level packaging. Therefore, to further improve performance, reliability, and reduce cost, it is essential to develop novel integration and packaging technologies in the form of Integrated Power Electronics Modules (IPEMs),

which must enable the integration of all the converter functions and not only concentrate on the switching stage.

These novel integration and packaging technologies, in conjunction with suitable devices, sensors and integrated design tools used to exploit the physical properties of available materials have been the research focus of the Center for Power Electronics Systems. The role of the technologies mentioned above in the IPEM concept is key to achieving high levels of integration and to enabling significant growth of the power electronics industry. It is evident that further innovations will be necessary as power densities increase. The impacts of system integration via IPEMs will enable a rapid growth of power electronics applications with reduced costs and design cycles that can be compared to the impacts in computer applications brought about by the VLSI circuit technology.

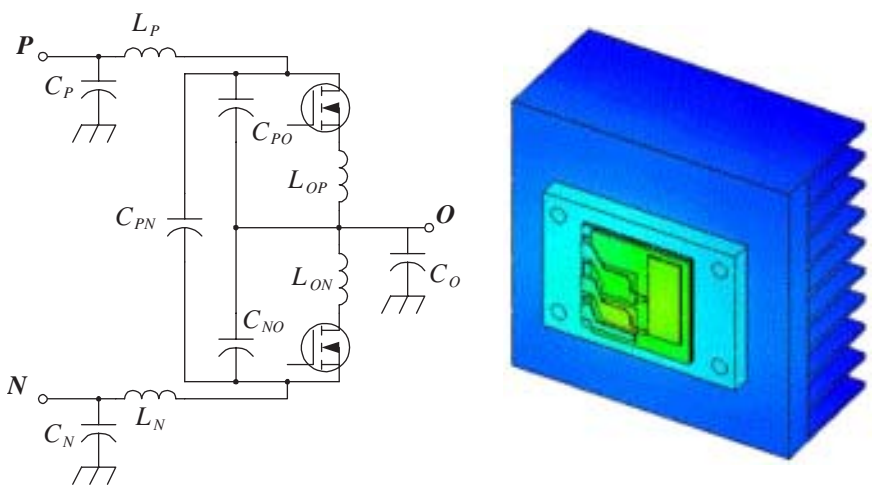

Figure 17. (a) Partial equivalent circuit of the active IPEM and (b) thermal map of the IPEM.

Acknowledgements

The authors would like to thank Dr. J.T. Strydom, Dr. X. Liu, Dr. S. Wen, Mr. L. Zhao, Mr. R. Chen, Mr. F. Canales, Mr. B. Lu, Mr. Z. Chen, Mr. D. Huff, Ms. Y. Pang and Mr. E. Sewall for their contributions to this paper. This work was supported by the ERC Program of the National Science Foundation under Award Number EEC-9731677.

References

[1] B. J. Baliga, "The Future of Power Semiconductor Device Technology", *IEEE Proceedings*, vol. 89, no. 6, pp. 822–832, June 2001.

[2] B. J. Baliga, "Evolution and Status of Smart Power Technologies", *Proceedings IEEE 8th Applied Power Electronics Conference (APEC)*, pp. 18–21, 1993.

[3] T. Stockmeier and W. Tursky, "Present and Future of Power Electronics Modules", *Proceedings Center for Power Electronics Systems Seminar*, pp. 3–9, 2000.

[4] J. D. van Wyk, F. C. Lee, and D. Boroyevich, "Power Electronics Technology: Present Trends and Future Developments", *IEEE Proceedings*, vol. 89, no. 6, pp. 799–802, June 2001.

[5] J. Meindl, "Special Issue on Limits of Semiconductor Technology", *IEEE Proceedings*, vol. 89, no. 3, pp. 223–226, 2001.

[6] J. D. van Wyk, "Power Electronics at the Dawn of a New Century—Past Achievements and Future Expectations", *Proceedings Third CES/IEEE International Power Electronics and Motion Control Conference (IPEMC)*, pp. 9–20, 2000.

[7] M. C. Shaw and B. C. Beihoff, "Packag-

ing of Integrated Solid-State Power Assembly Cells: A Thermo-Mechanics Based Approach", *IEEE Proceedings*, vol. 89, no. 6, pp. 856–863, June 2001.

[8] J. D. van Wyk and J. A. Ferreira, "Some Present and Future Trends in Power Electronic Converters", *Proceedings IEEE-IECON'92*, vol. 1, pp. 9–18, 1992.

[9] K. Puttlitz and P. A. Totta, *Area Array Interconnection Handbook*. Boston: Kluwer Press, 2001.

[10] X. Liu and G-Q Lu, "D2BGA Chip-Scale IGBT Package", *Proceedings IEEE 16th Applied Power Electronics Conference (APEC)*, vol. 2, pp. 1033–1039, 2001.

[11] S. Wen, D. Huff, and G-Q Lu, "Enhancement of Thermal Fatigue Reliability of Power Semiconductor Interconnects Using Dimple-Array Solder Joints", *Proceedings IEEE 32nd Annual Power Electronics Specialists Conference (PESC'01)*, vol. 4, pp. 1926–1931, 2001.

[12] Z. X. Liang, F. C. Lee, G-Q. Lu, and D. Borojevic, "Embedded Power—A Multilayer Integration Technology for Packaging of IPEMs and PEBBs", *Proceedings IEEE International Workshop on Integrated Power Packaging (IWIPP)*, p. 41, July, 2000.

[13] J. T. Strydom, J. D. van Wyk, and M. A. de Rooij, "Integration of a 1MHz Converter with Active and Passive Stages", *Proceedings IEEE 16th Applied Power Electronics Conference (APEC)*, vol. 2, pp. 1045–1050, 2001.

[14] J. D.van Wyk, J. T. Strydom, L. Zhao, and R. Chen, "Review of the Development of High Density Integrated Technology for Electromagnetic Power Passives", *Proceedings 2nd International Conference on Integrated Power Systems (CIPS 2002)*, pp. 15–34, June 2002.

[15] J. T. Strydom and J. D. van Wyk, "Improved Loss Determination for Planar Integrated Power Passive Modules", *Proceedings IEEE 17th Applied Power Electronics Conference (APEC)*, vol. 1, pp. 332–338, March 2002.

[16] R. Chen, J. T. Strydom, and J. D. van Wyk, "Design of Planar Integrated Passive Module for Zero Voltage Switched Asymmetrical Half Bridge PWM Converter", *Conference Record IEEE Industry Applications Conference (IAS 2001)*, vol.4, pp. 2232–2238, 2001.

[17] R. Chen, F. Candes, B. Yang, J.D. van Wyk, "Volumetric Optimal Design of Passive Integrated Power Electronic Module (IPEM) for Distributed Power System (DPS) Front-End DC/DC Converter", *Conference Record IEEE Industry Applications Conference (IAS 2002)*, vol. 3, pp. 1758–1765, 2002.

[18] R. Chen, J. T. Strydom, and J. D. van Wyk, "Second Order Approximation Lumped Parameter Model for Integrated L-L-C-T Module", *Conference Record IEEE Industry Applications Conference (IAS 2002)*, vol. 4, pp. 2419–2424, 2002.

[19] A. Collado, X. Jorda, E. Cabruja, and P. Godignon, "MCM-D Package for Power Applications", *Proceedings IEEE International Workshop on Integrated Power Packaging (IWIPP)*, pp.69–73 2000.

[20] A. B. Lostetter, F. Barlow, and E. Elshabini, "An Overview to Integrated Power Module Design for High Power Electronics Packaging", *Microelectronics Reliability*, vol. 40, no. 3, pp. 365–379, 2000.

[21] H. Goldstein, "Packages Go Vertical", *IEEE Spectrum*, pp. 46–51, August 2001.

[22] Y. P. Pang, J. Z. Chen, E. Scott, K. Thole, and D. Boroyevich, "Electrical and Thermal Layout Design and Optimization Considerations for DPS Active IPEM", *Proceedings Center for Power Electronics Systems Seminar*, pp. 77–82, 2002.

[23] J. D. van Wyk, S. Wen, Z. Liang, J. T. Strydom, S-Y. Lee, H. Odendaal, and D. A. Huff, "The Development of Planar High Density Hybrid Integration Technologies for Power Electronics", *Proceedings, 10th International Conference on Power Electronics and Motion Control EPE-PEMC, Cavtat*, Paper SSJAF-01, 14 pp, 2002.

[24] P. Xu, Q. Wu, P-L. Wong, and F. C. Lee, "A Novel Integrated Current Doubler Rectifier", *Proceedings IEEE 15th Applied Power Electronics Conference (APEC)*, pp. 735–740, 2000.

[25] J. Z. Chen, Y. Wu, C. Gence, D. Boroyevich, and J. H. Bohn, "Integrated Electrical and Thermal Analysis of Integrated Power Electronics Modules Using iSIGHT", *Proceedings IEEE 16th Applied Power Electronics Conference (APEC)*, pp. 1002–1006, 2001.

[26] D. Boroyevich and J. Z. Chen, "Integrated Multidisciplinary Modeling, Analysis and Design in Power Electronics", *Proceedings, 10th International Conference on Power Electronics and Motion Control EPE-PEMC, Cavtat*, Paper SSJAF-05, 10 pp, 2002.

Technology Trends toward a System-in-a-Module in Power Electronics

Fred C. Lee received the B.S. degree in electrical engineering from the National Cheng Kung University, Taiwan, R.O.C., in 1968 and the M.S. and Ph.D. degrees in electrical engineering from Duke University, Durham, NC, in 1971 and 1974, respectively. He is a University Distinguished Professor with Virginia Polytechnic Institute and State University, Blacksburg, and directs the Center for Power Electronics Systems (CPES), a National Science Foundation engineering research center. He is also the founder and director of the Virginia Power Electronics Center (VPEC). His research interests include high-frequency power conversion, distributed power systems, space power systems, power factor correction techniques, electronics packaging, high-frequency magnetics, device characterization, and modeling and control of converters. He holds 19 U.S. patents, and has published over 120 journal articles in refereed journals and more than 300 technical papers in conference proceedings. Dr. Lee has received numerous awards in education and research, including the IEEE Power Electronics Society's William E. Newell Power Electronics Award, the Arthur E. Fury Award for Leadership and Innovation in Advancing Power Electronic Systems Technology (1998), the IEEE Millennium Medal, and various honorary professorships. During 1993–1994, he served as president of the IEEE Power Electronics Society.

Jacobus Daniel van Wyk received the M.Sc.Eng.-degree from the University of Pretoria, South Africa in 1966, the degree of Doctor of Technical Science from the University of Technology, Eindhoven Netherlands in 1969 and the degree D.Sc. (Eng) (honoris causa) from the University of Natal, South Africa in 1996. From 1971 to 1992 he held chairs in Electronics and in Power Electronics at the Rand Afrikaans University, Johannesburg. He founded the Industrial Electronics Technology Research Group in the Faculty of Engineering in 1978, directing it until 1999. Since July 1995 he held the special University Council Research Chair in Industrial Electronics, and joined the Bradley Department of Electrical and Computer Engineering in January 2000, where he is the J. Byron Maupin Professor of Engineering at Virginia Tech, Blacksburg, VA, USA, working in the National Science Foundation Engineering Research Center for Power Electronics Systems.

Dr. van Wyk is a fellow of the IEEE, a Fellow of the South African Institute of Electrical Engineers and has been author or co-author of more than 400 publications. He has been co-recipient of 10 IEEE prize paper awards, recipient of the IEEE William E. Newell Power Electronics Award in 1995, and the IEEE Third Millennium Medal in 2000.

Dushan Boroyevich received the B.S. degree from the University of Belgrade, Yugoslavia, in 1976, the M.S. degree from the University of Novi Sad, Yugoslavia, in 1982, and the Ph.D. degree from the Virginia Polytechnic Institute and State University (Virginia Tech), Blacksburg, in 1986. Between 1986 and 1990, he was assistant professor and director of the Power and Industrial Electronics Research Program, Institute for Power and Electronic Engineering, University of Novi Sad, and later, acting head of the Institute. In 1990, he joined The Bradley Department of Electrical and Computer Engineering, Virginia Tech, as associate professor. From 1996 to 1998, he was associate director of Virginia Power Electronics Center, and since 1998 he has been the deputy director of the NSF Engineering Research Center for Power Electronics Systems and professor at the department. His research interests include multiphase power conversion, high-power PWM converters, modeling and control of power converters, applied digital control, and electrical drives. He has published over 100 technical papers, has three patents, and has been involved in numerous government and industry-sponsored projects in the areas of power and industrial electronics.

Dr. Boroyevich is a member of Phi Kappa Phi, the IEEE Power Electronics Society AdCom, and the IEEE Industry Applications Society Industrial Power Converter Committee.

Guo-Quan (GQ) Lu is associate professor in the Departments of Materials Science and Engineering and Electrical and Computer Engineering at Virginia Polytechnic Institute and State University (Virginia Tech). He got his Ph.D. in Applied Physics/Materials Science from Harvard University in 1990. His research activities and interests are in the general area of materials and processing development for applications in microelectronics, power electronics, optoelectronics, sensors, and nanotechnology. From 1998 to 2000, Dr. Lu had been Program Leader for Advanced Power Electronics Packaging in the Center for Power Electronics Systems, an NSF Engineering Research Center based at Virginia Tech. He has been responsible for developing several three-dimensional packaging technologies for integrated power electronics modules. Dr. Lu holds three U.S. patents and has published over 90 papers in journals and conference proceedings. He was the 1995 winner of Virginia Tech Sporn Award for excellence in teaching of engineering subjects and was the recipient of a National Science Foundation CAREER award in 1995.

Zhenxian Liang received the B.Sc (Eng.) degree and the M. Sc (Eng.) degree, both from Xi'an Jiaotong University, Xi'an, China, and the Ph.D degree from Chinese Academy of Science, China in 1983, 1986 and 1993, respectively.

Upon completion of the two-year Chinese national postdoctoral program, he became associate professor in the Department of Electrical Engineering, Xi'an Jiaotong University since 1994. He spent one year at the EEE Department of Hong Kong University of Science and Technology, Hong Kong, China as a research associate in 1997. He joined the Center for Power Electronics Systems (CPES) at Virginia Tech, USA in 1998, where he is currently research scientist. His research has focused on the development of electronic devices and integrated modules. He has authored or co-authored more than 50 published papers on semiconductor microfabrication physics, microchannel spatial light modulator, GaAs PCSS, and planar process module of integrated chips for packaging of IPEM.

Peter Barbosa received the B. S. degree in electrical engineering from the Federal University of Uberlândia, Brazil, in 1992, the M.S. degree from the Federal University of Santa Catarina, Florianópolis, Brazil, in 1993, and the Ph.D. degree from the Virginia Polytechnic Institute and State University (Virginia Tech), Blacksburg, in 2002. Between 1993 and 1995, he was research assistant at the Power Electronics Institute (INEP) of the Federal University of Santa Catarina, Florianópolis, Brazil. Prior to joining Virginia Tech in 1997, he was assistant professor at the Department of Electrical Engineering of the Federal University of Paraná, Curitiba, Brazil. Since 2001, he has been technical director for the NSF Engineering Research Center for Power Electronics Systems. His research interests include power factor correction circuits, distributed power systems, modeling of power converters, and integration of power electronics systems.